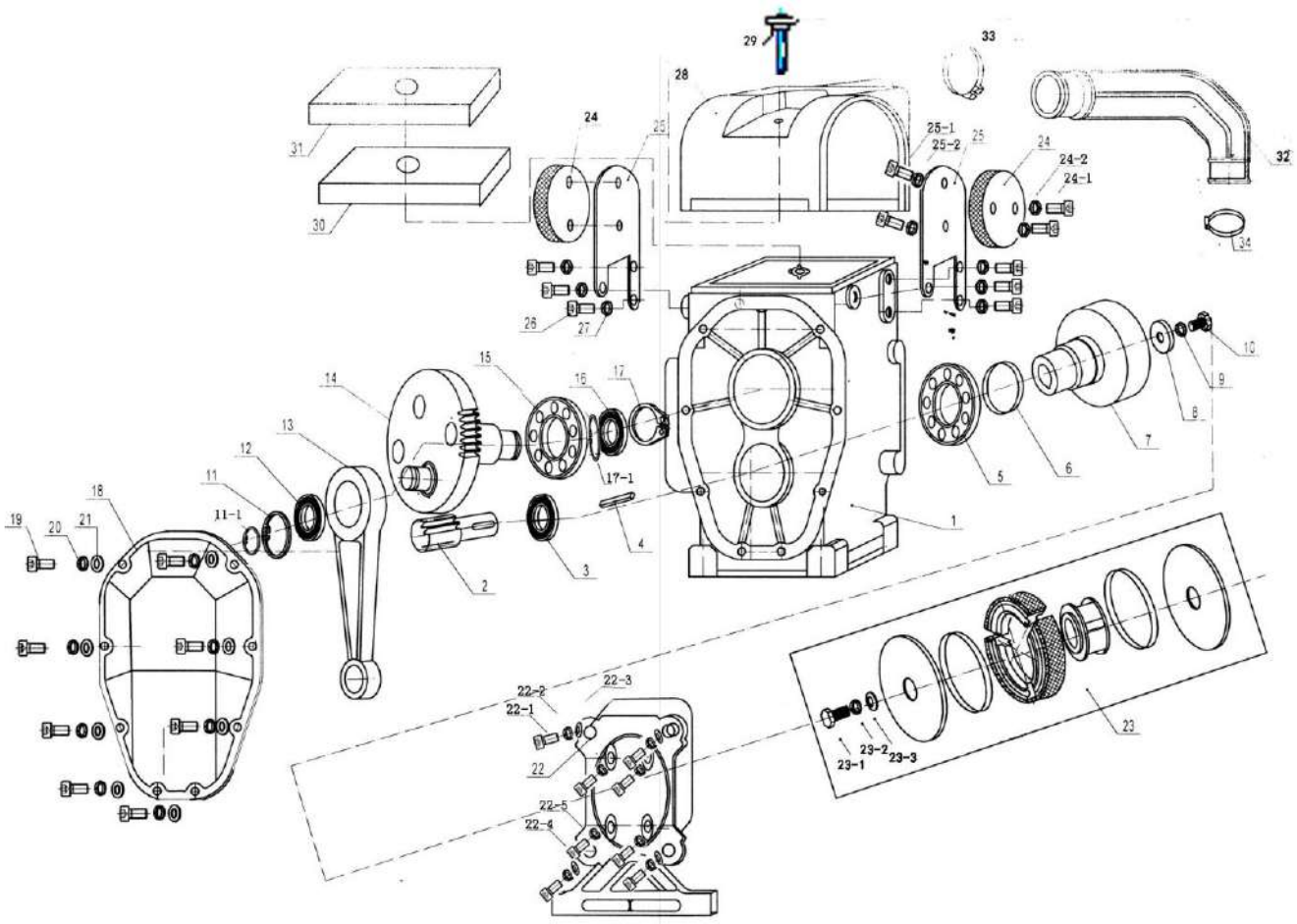
29
33
28
31
24
26
25-1
25-2
25
24
24-2
24-1
32
30
34
26
27
10
9
8
7
6
5
15
14
16
17
17-1
13
12
11
11-1
4
3
2
1
18
19
20
21
22-2
22-3
22-1
22
22-5
22-4
23
23-1
23-2
23-3

ITEM NO.	PART NO.	DESCRIPTION				
1	SG70R001	CRANK CASE				
2	SG70R002	GEAR SHAFT FOR SG70				
3	6204	BEARING 6204-GB276				
4	GB1096-5X20	KEY5x20				
5	6007	BEARING 6007-GB276				
6	GB3452.1-40x68x8	O-RING 40x68x8-GB3452.1				
7	SG70R003	CLUTCH DRUM				
8	GB97.1-8	WASHER 8-GB97.1				
9	GB93-8	SPRING WASHER 8-GB93				
10	GB5783-M8X20	BOLT M8X20-GB5783				
11	GB893.1-52	RETAINING RING 52-GB893.1				
11-1	GB893.1-20	RETAINING RING 20-GB893.1				
12	6304	BEARING 6304-GB276				
13	SG70R004	CONNECTING ROD				
14	SG70R005	CRANK GEAR				
15	6207	BEARING 6207-GB276				
16	6305	BEARING 6305-GB276				
17	GB893.1-25	RETAINING RING 25-GB893.1				
17-1	GB893.1-62	RETAINING RING 62-GB893.1				
18	SG70R006	GEAR COVER				
19	T5783-M6X20	BOLT M6X20-GB5783				
20	GB93-6	SPRING WASHER 6-GB93				
22	SG70R007-1	CONNECTING PLATE FOR SG70H & SG70C				
	SG70R007-2	CONNECTING PLATE FOR SG70R1				
	SG70R007-3	CONNECTING PLATE FOR SG70R2				
	SG70R007-4	CONNECTING PLATE FOR SG70LC & SG80R1				
	SG70R007-5	CONNECTING PLATE FOR SG80H,SG80R2 & SG80LC				
	SG70R007-6	CONNECTING PLATE FOR SG80D				
23	SG70R008-1	CLUTCH ASSY. FOR SG70H,SG70C, SG70R1，SG70R2，SG70LC, SG80R1，SG80D				
	SG70R008-2	CLUTCH ASSY. FOR SG80H,SG80R2 & SG80LC				
23-1	GB5783-M8X20	BOLT M8X20-GB5783				
23-2	GB97.1-8	WASHER 8-GB97.1				
23-3	GB93-8	SPRING WASHER 8-GB93				
24	SG70R009	VIBRATION DAMPER				
25	SG70R010	DAMPER PLATE				
26	GB5783-M8X25	BOLT M8X25-GB5783				
27	GB93-8	SPRING WASHER 8-GB93				
27-1	GB97.1-8	WASHER 8-GB97.1				
28	SG70R011	AIR CLEANER COVER				
29	SG70R012	KNOB				
30	SG70R013	AIR CLEANER ELEMENT1				
31	SG70R014	AIR CLEANER ELEMENT2				
32	SG70R015	INTAKE PIPE FOR SG70				
33	SG70R017	HOSE CLAMP 35				
34	SG70R018	HOSE CLAMP 35				

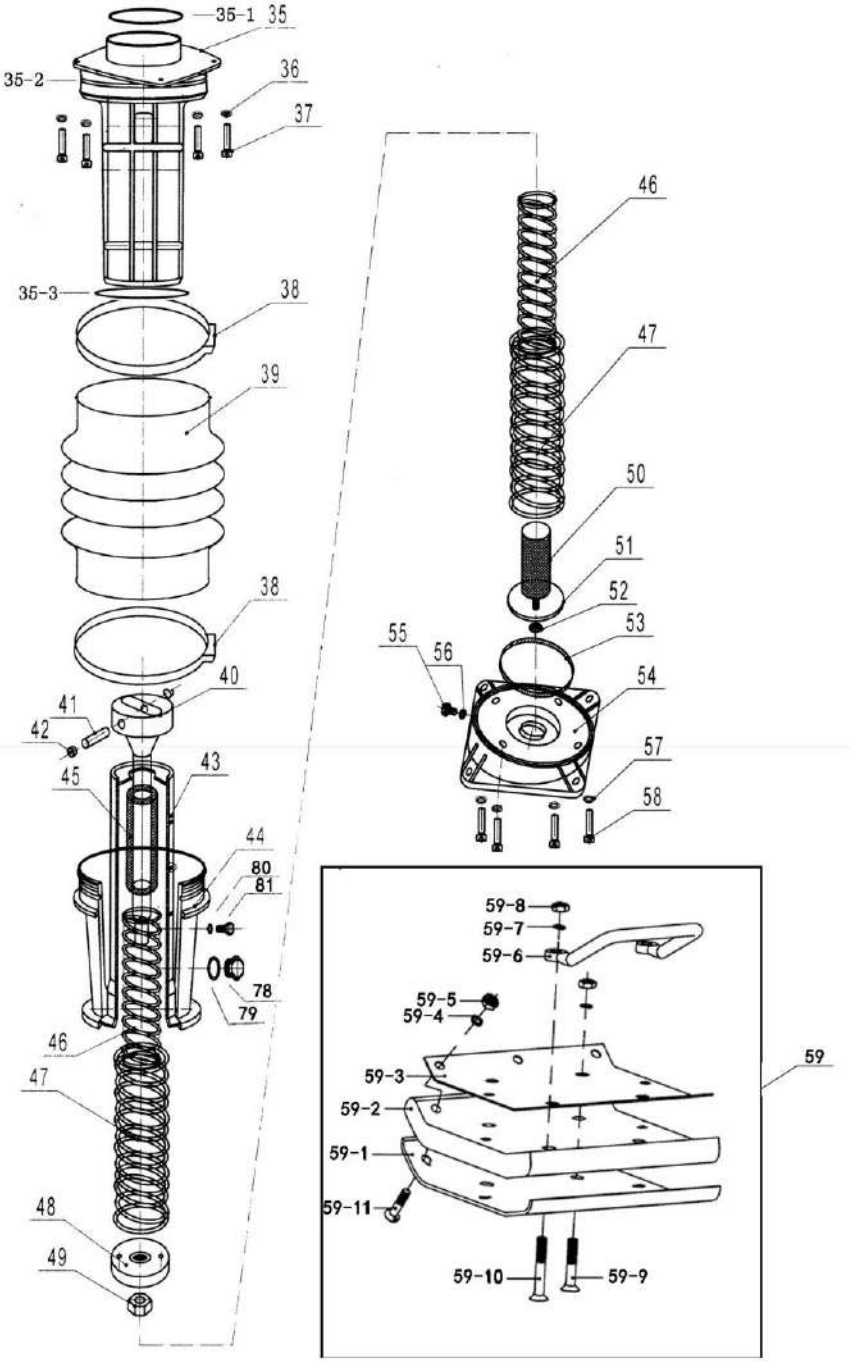
35-1
35
35-2
36
37
35-3
38
39
38
40
41
42
45
43
44
80
81
78
79
46
47
48
49
46
47
50
51
52
53
55
56
54
57
58
59-8
59-7
59-6
59-5
59-4
59-3
59-2
59-1
59-11
59-10
59-9
59

35	SG70R019	GUIDE CYLINDER				
35-1	GB3452.1-99×4	O-RING 99X4-GB3452.1				
35-2	GB3452.1-150×3.55	O-RING 150X3.55-GB3452.1				
35-3	GB3452.1-150×3.55	O-RING 150X3.55-GB3452.1				
36	T93-10	SPRING WASHER 10-GB93				
37	T5783-M10X30	BOLT M10X30-GB5783				
38	SG70R020	BELLOW CLAMP				
39	SG70R021	BELLOW				
40	SG70R022	PISTON ROD				
41	SG70R023	PISTON PIN				
42	T893.1-15	RETAINING RING 15-GB893.1				
43	SG70R024	SPRING CYLINDER				
44	SG70R025	PROTECTION SLEEVE				
45	SG70R026	STOPPER, UPPER				
46	SG70R027	SPRING, INNER				
47	SG70R028	SPRING, OUTER				
48	SG70R029	PISTON END				
49	SG70R030	NUT M18X28				
50	SG70R031	STOPPER, LOWER				
51	SG70R032	WASHER 74-GB97.1				
52	SG70R033	NUT M8				
53	SG70R034	O-RING 119x5				
54	SG70R035	FOOT PLATE				
55	GB5783-M8X25	BOLT M12X12-GB5783				
56	GB97.1-12	COMBINATION WASHER 12-GB97				
57	T93-10	SPRING WASHER 10-GB93				
58	GB5783-M10X25	BOLT M10X25-GB5783				
59	SG70R036	FOOT ASSY.				
59-1	SG70R037	METAL SHEET				
59-2	SG70R038	FOOT				
59-3	SG70R039	FOOT COVER				
59-4	GB97-10	WASHER 10-GB97.1				
59-5	T889-M10	HEXAGONAL NUT M10-GB889				
59-6	SG70R040	LIFTING HOOK				
59-7	T93-12	SPRING WASHER 12-GB93				
59-8	T889-M12	HEXAGONAL NUT M12-GB889				
59-9	T11-M12X65	SCREW M12X65-GB11				
59-10	T11-M12X65	SCREW M12X65-GB11				
59-11	T11-M10X50	SCREW M10X50-GB11				
78	T70-M20X9	LEVEL GAUGE M20X9-GB1160.2				
79	SG70R041	RUBBER WASHER 20				
80	GB93-14	COMBINATION WASHER 14-GB97				
81	GB5783-M14X12	BOLT M14X12-GB5783				

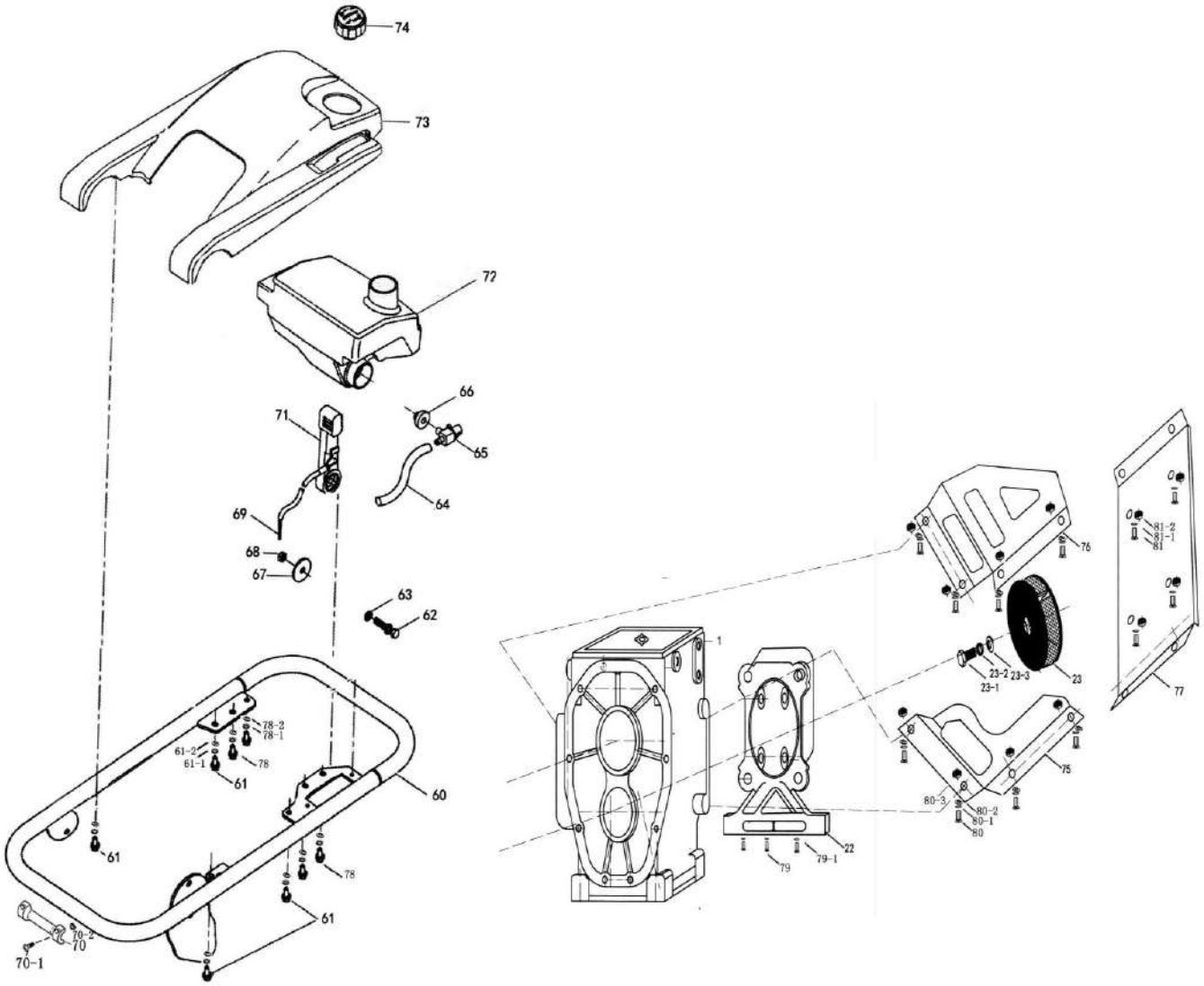
74
73
72
66
65
64
71
69
68
67
63
62
78-2
78-1
61-2
61-1
78
61
60
61
78
61
70-2
70
70-1
1
22
79
79-1
76
23-2
23-3
23-1
23
75
80-3
80-2
80-1
80
77
81-2
81-1
81

60	SG70R042	HANDLE
61	GB5783-M8X20	BOLT M8X20-GB5783
61-1	GB97-8	WASHER 8-GB97.1
61-2	T93-8	SPRING WASHER 8-GB93
62	GB5783-M6X30	BOLT M6X30-GB5783
63	GB93-6	BUTTERFLY WASHER 6-GB93
64	SG70R043	FUEL HOSE
65	SG70R044	FUEL COCK
66	GB6173-M14X1.5	NUT M14X1.5-GB/T6170-1986
67	GB97-6	WASHER 6-GB97.1
68	T6170-M6	NUT M6 GB/T6170-1986
69	SG70R045	THROTTLE WIRE
70	SG70R046	Bone wheel
70-1	GB5783-M5X25	BOLT M5X25-GB5783
70-2	T6170-M5	NUT M5 GB/T6170-1986
71	SG70R047	THROTTLE CONTROL ASSY.
72	SG70R048	(INCLUDING CABLE)
73	SG70R049	PLASTIC COVER
74	SG70R050	TANK CAP
75	SG70R051	TANK PROTECTION FRAME, RIGHT FOR SG70H,SG70C, SG70R1，SG70R2，SG70LC.SG80R1，SG80D PROTECTION FRAME, RIGHT FOR SG80H,SG80R2 & SG80LC
76	SG70R052	PROTECTION FRAME, LEFT FOR SG70H,SG70C, SG70R1，SG70R2，SG70LC.SG80R1，SG80D PROTECTION FRAME, LEFT FOR SG80H,SG80R2 & SG80LC
77	SG70R053	BRACKET FOR SG70H,SG70C, SG70R1，SG70R2，SG70LC.SG80R1，SG80D BRACKET FOR SG80H,SG80R2 & SG80LC
78	GB5783-M6X16	BOLT M6X16-GB5783
78-1	GB97-6	WASHER 6-GB97.1
78-2	T93-6	SPRING WASHER 6-GB93
79	GB5783-M10X25	BOLT M10X25-GB5783
79-1	T93-10	SPRING WASHER 10-GB93
80	GB5783-M8X20	BOLT M8X20-GB5783
80-1	GB97-8	WASHER 8-GB97.1
80-2	T93-8	SPRING WASHER 8-GB93
80-3	T889-M8	HEXAGONAL NUT M8-GB889
81	GB5783-M8X35	BOLT M8X35-GB5783
81-1	GB97-8	WASHER 8-GB97.1
81-2	T889-M8	HEXAGONAL NUT M8-GB889